Engineering Release Notice (ERN)	Location	Change description		P/A: . Modified:	Document release status:
		Added: Deleted:	MiMos	D: 2 , 4 Modified: NO	RELEASED
					Date / Modification count

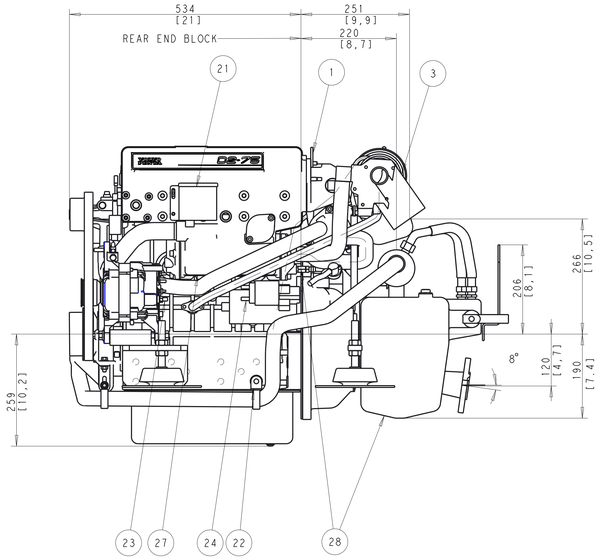

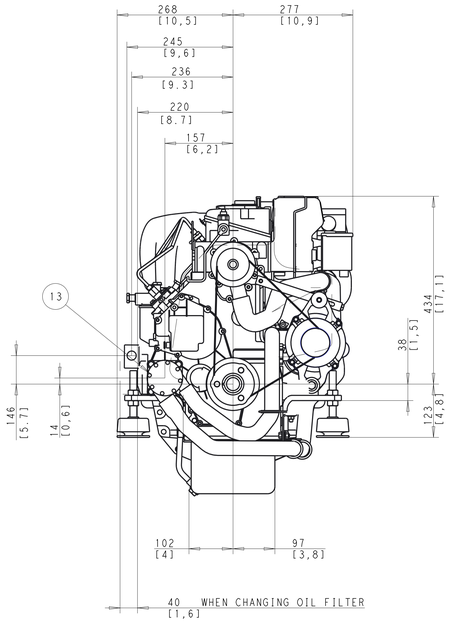

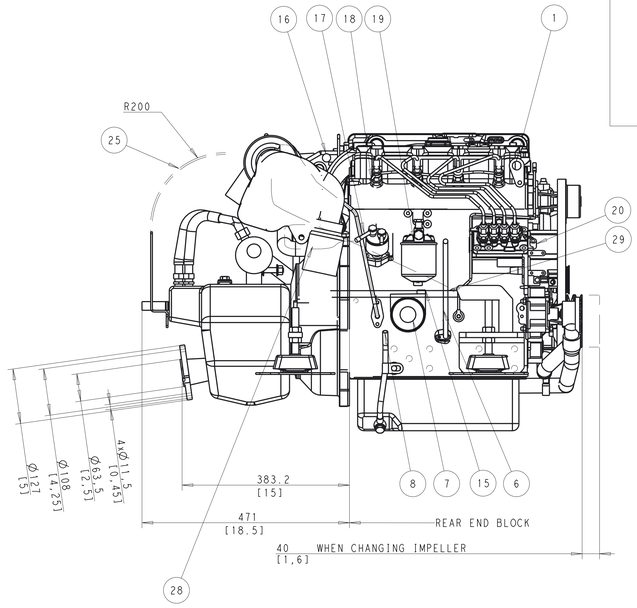

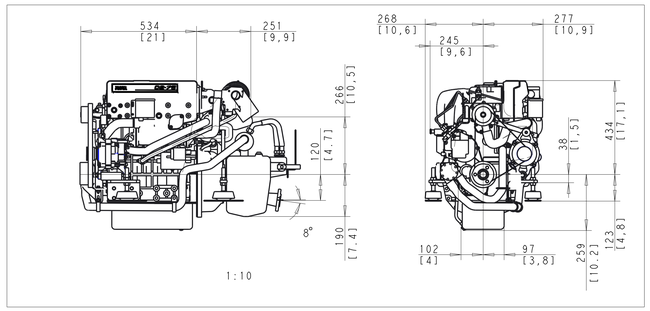

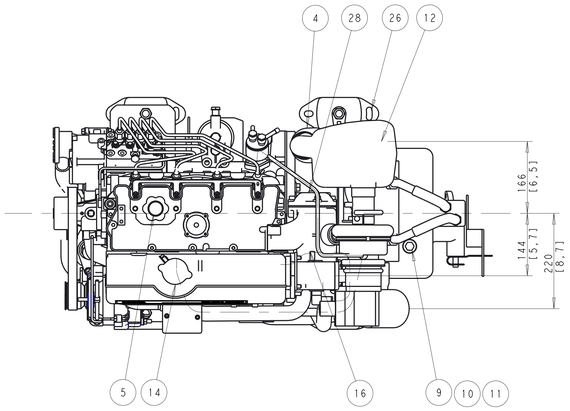

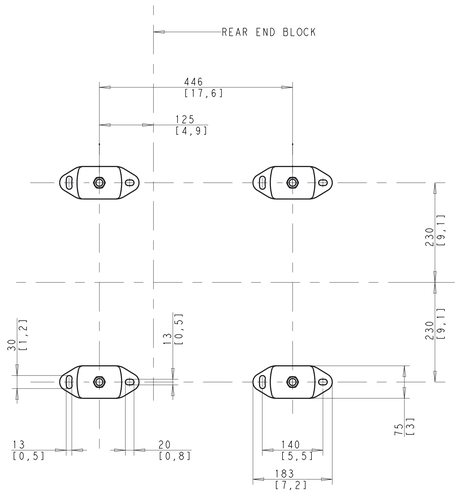

1 LIFTING DEVICE
3 EXHAUST ELBOW FOR HOSE I.D 89
4 AIR FILTER
5 OIL FILLING
6 OIL DIPSTICK ENGINE
7 OIL FILTER
8 OIL DRAIN FOR PUMP, ENGINE
9 OIL DIPSTICK REVERSE GEAR
10 OIL FILLER CAP REVERSE GEAR
11 OIL DRAIN FOR PUMP, REVERSE GEAR
12 WATER INLET FOR HOSE I.D 32
13 SEA WATER PUMP
14 WATER FILLER CAP FRESH WATER
15 HEAT WATER OUTLET
16 HEAT WATER INLET
17 FUEL CONNECTION FOR HOSE I.D 9
18 FUEL RETURN CONNECTION FOR HOSE I.D 9
19 FUEL FILTER
20 SPEED CONTROL LEVER
21 CONNECTION BOX FOR EXTENTION CABLE
22 BATTERY MINUS (-) CONNECTION
23 PLUS (+) CONNECTION FOR CHARGING DISTRIBUTOR
24 STARTER BATTERY PLUS (+) CONNECTION
25 GEAR SHIFT CONTROL CABLE
26 AIR INLET SILENCER
27 WATER DRAIN, FRESH WATER
28 WATER DRAIN, SEA WATER
29 THROTTLE CONTROL CABLE

SCALE 1:5

SYMBOLS, DESIGNATIONS AND GENERAL DRAWING METHODS STD 101-0005

The copying, distribution and utilization of this document as well as the communication of its contents to others without expressed authorization is prohibited. Offenders will be held liable for the payment of damages. All rights reserved in the event of the grant of a patent, utility model or ornamental design registration.

Document title
ENGINE INSTALLATION
D2-60, D2-75 / HS25A

Document type
INSTALLATION DRAWING

Owner domain:Document prefix

VOLVO PENTA

Document No	Issue index	Sheet No
3591002	03	1(1)

SIZE A3